WIRING DIAGRAM

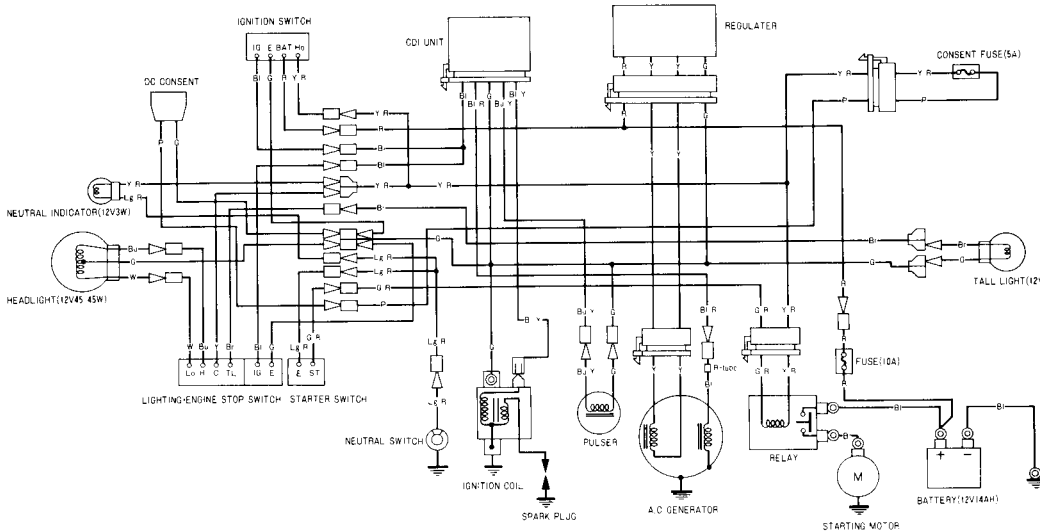

IGNITION SWITCH

	IG	E	BAT	Ho
OFF	●	●		
ON			●	●
COLOR	Bl	G	R	Y R

LIGHTING SWITCH

	TL	C	LO	H
OFF				
LO	●	●	●	
(N)	●	●	●	●
H	●	●	●	●
COLOR	Br	Y	W	Bl

ENGINE STOP SWITCH

	G	E
OFF	●	●
RUN		
COLOR	B	G

STARTER SWITCH

	ST	E
FREE		
PUSH	●	●
COLOR	G R	Lg R

Bl ····· BLACK
Br ····· BROWN
Y ····· YELLOW
O ····· ORANGE
Bu ····· BLUE
Lb ····· LIGHT BLUE
G ····· GREEN
Lg ····· LIGHT GREEN
R ····· RED
P ····· PINK
W ····· WHITE
Gr ····· GRAY

0030Z-958-6820-