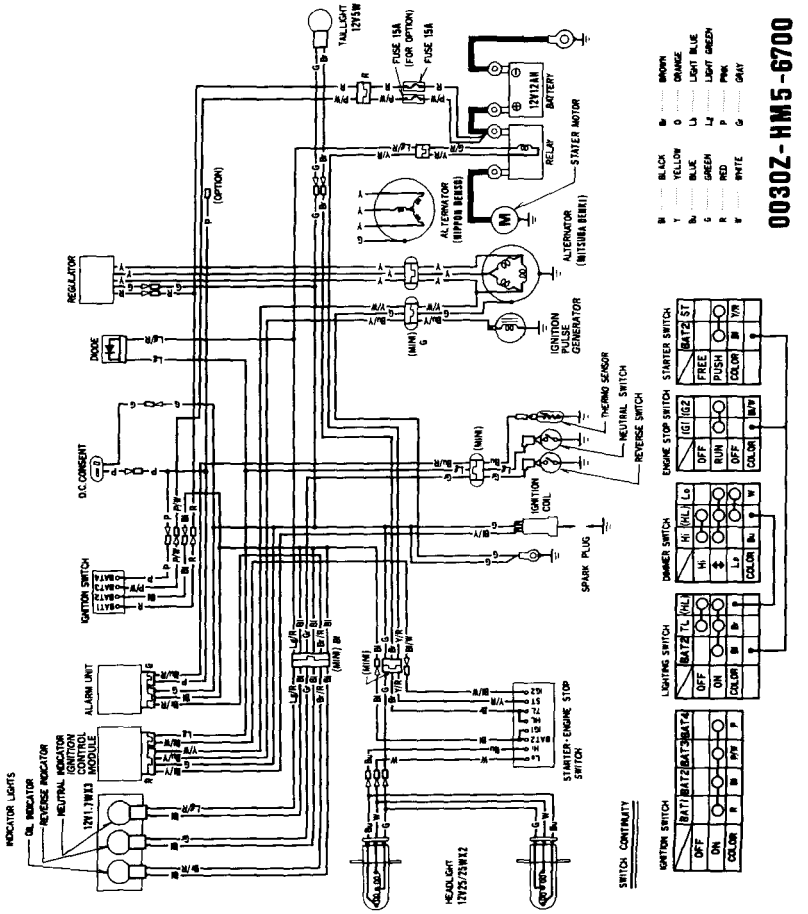WIRING DIAGRAM