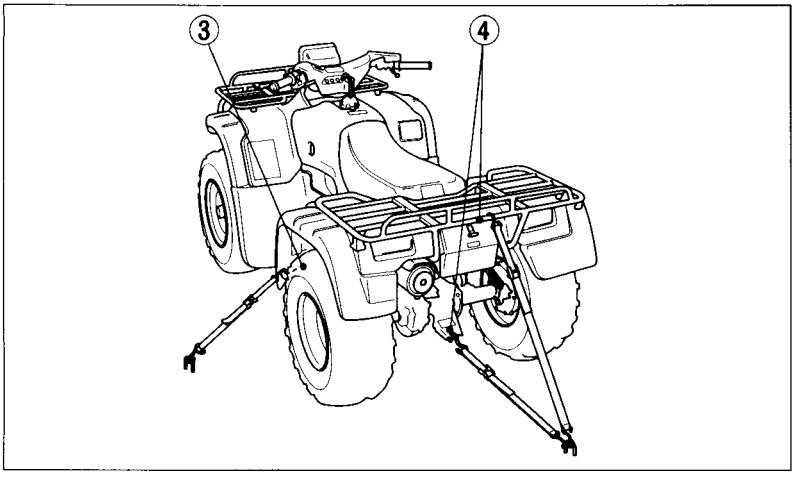

Fig. 4-41	Points to secure FOURTRAX with tie downs	(3)	Left footpeg
		(4)	Rear cargo rack or Trailer hitch

If it is necessary to incline your FOURTRAX upright on the rear end:

1. Follow steps 1 and 2 above.
2. Place the carburetor drain tube in a suitable container.
3. Turn the drain screw counterclockwise and drain the fuel from the carburetor.
4. After draining the carburetor, turn the drain screw clockwise until it is tight.
5. Pour the drained fuel into the fuel tank.
6. Tilt the vehicle and secure properly.

Do not tow your FOURTRAX behind a car or other vehicle.