ENGINE OIL

Oil Filler Cap/Dipstick

The oil filler cap/dipstick (Fig. 2-21), on the rear crankcase cover, is used to measure the oil level. The oil should be checked each day *before operating the FOURTRAX and maintained between the upper* level mark (2) and the lower level mark (3).

For oil recommendations and instructions on checking, adding and changing oil, see pages 101 – 105.

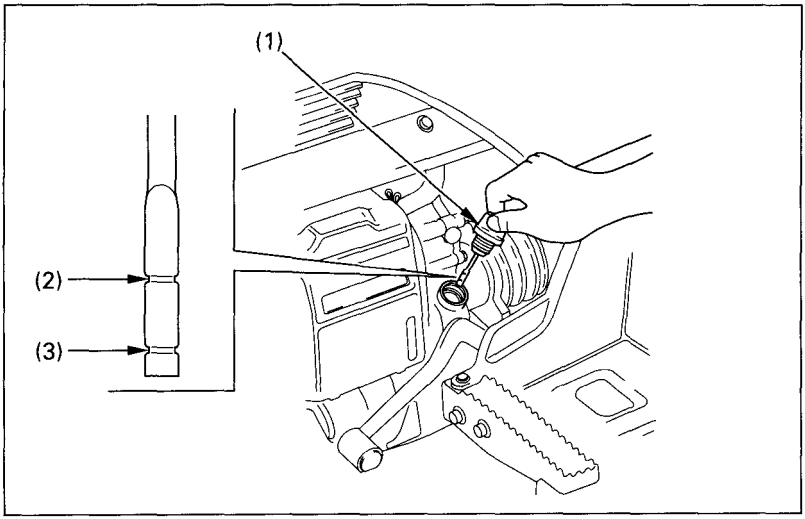

Fig. 2-21 (1) Oil filler cap/dipstick (2) Upper level mark (3) Lower level mark

While reading this manual, remember:

⚠WARNING **Indicates a strong possibility that serious injury or death may result if instructions are not followed.**