Z50J (SA, D)

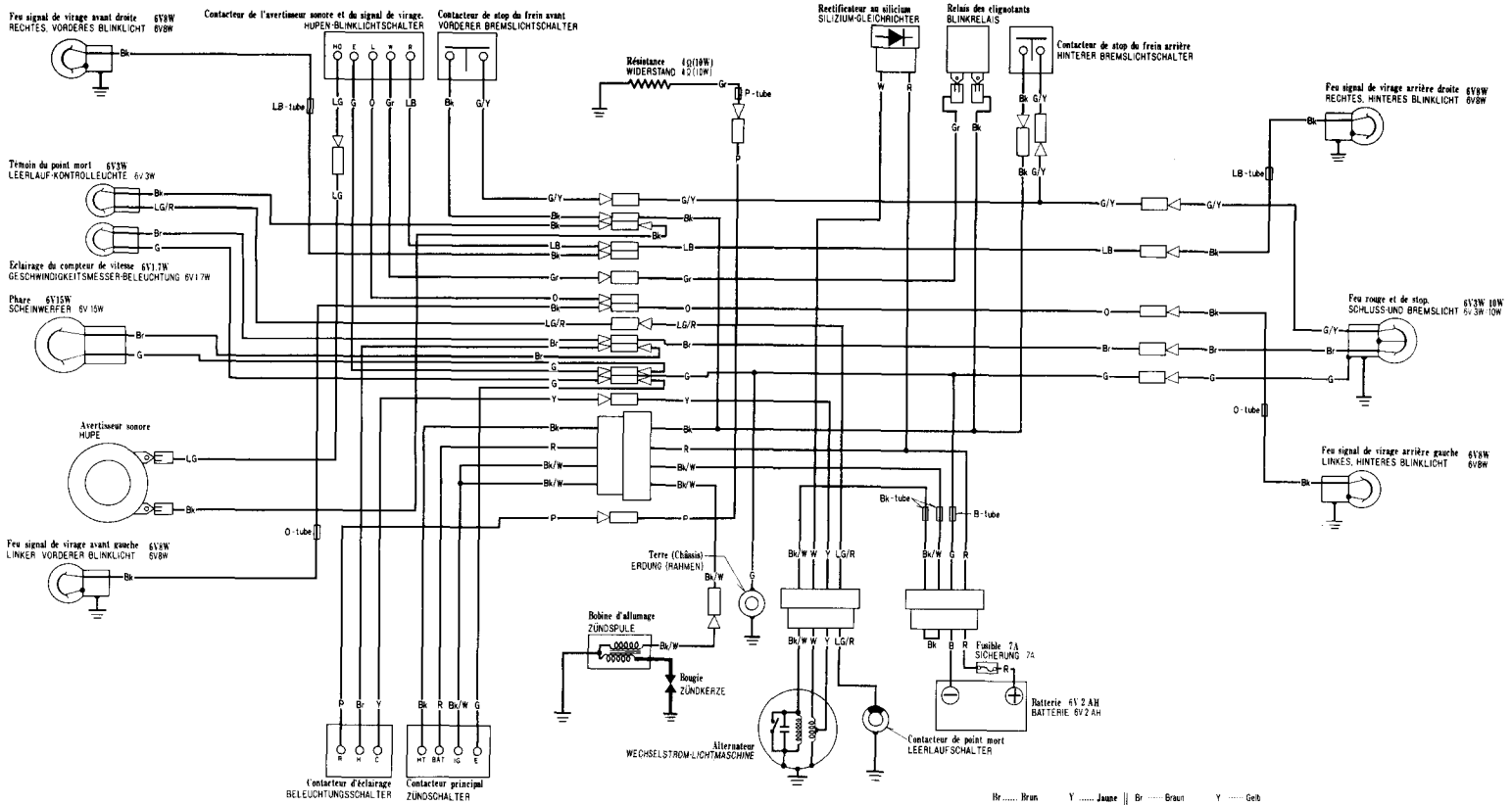

0030Z-165-7600