SXS1000M3L/M5L

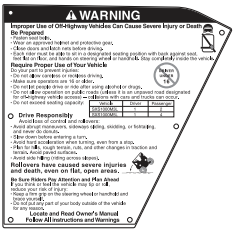

⚠ WARNING

Improper Use of Off-Highway Vehicles Can Cause Severe Injury or Death. Be Prepared.
Do your part to **prevent injuries.**
- Wear an approved helmet and protective gear.
- Close doors and lock nets before driving.
- Back rider must be able to sit in a designated seating position with back against seat.
- Keep **both** hands, feet, and other body parts inside the vehicle at all times. Stay seated while the vehicle is moving.

Require Proper Use of Your Vehicle
Do your part to prevent injuries.
- Do not allow children or novices drivers.
- Make sure operators are 16 years or older.
- Do not allow operation by anyone using alcohol or drugs.
- Do not allow operation on public roads (unless it is an unpaved road designated for off-highway vehicle access) — utilizes soft cars and trucks can occur.
- Do not exceed seating capacity.

Seats	Driver	Passenger
2 Seat Models	1	1
3 Seat Models	1	2

Drive Responsibly
Avoidance of control and collisions.
- Avoid abrupt maneuvers, sideways sliding, skidding, or fishtailing, especially on wet surfaces.
- Slow down before entering a turn.
- Avoid hard acceleration when turning, even from a stop.
- Plan for hills, rough terrain, ruts, and other changes in traction and terrain. Avoid paved surfaces.
- Avoid sideways riding across slopes.

Rollovers have caused severe injuries and death, even on flat, open areas.

Be Sure Riders Pay Attention and Plan Ahead
Rider actions and terrain can **cause** rollovers.
Rider actions can **reduce** your risk of injury.
- Keep a firm grip on the steering wheel or handhold and **keep your feet on the floor.**
- Do not put any part of your body outside of the vehicle for any reason.

Locate and Read Owner's Manual
Follow All Instructions and Warnings

general warning

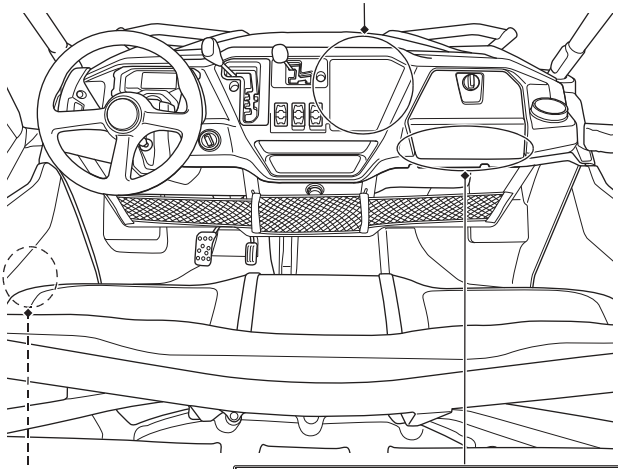

Shift and Drive select Information

- To prevent drivetrain damage, bring the unit to a complete stop before operating the shift select lever (L - H - N - R - P) and drive mode select lever (Turf - 2WD - I-4WD).

shift & drive select

(USA - 49 states, Canada, Australia, New Zealand models)

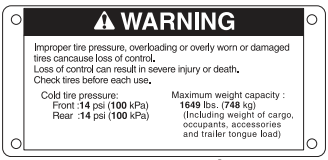

⚠ WARNING

Improper tire pressure, overloading or overly worn or damaged tires cancause loss of control.
Loss of control can result in severe injury or death.
Check tires before each use.

Cold tire pressure:
Front :**14** psi (**100** kPa)
Rear :**14** psi (**100** kPa)

Maximum weight capacity :
1649 lbs. (**748** kg)
(Including weight of cargo, occupants, accessories and trailer tongue load)

(USA - 50 states [meets California] models)

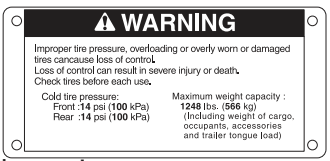

⚠ WARNING

Improper tire pressure, overloading or overly worn or damaged tires cancause loss of control.
Loss of control can result in severe injury or death.
Check tires before each use.

Cold tire pressure:
Front :**14** psi (**100** kPa)
Rear :**14** psi (**100** kPa)

Maximum weight capacity :
1248 lbs. (**566** kg)
(Including weight of cargo, occupants, accessories and trailer tongue load)

tire & overload warning