FRONT FENDER • FRONT WHEEL • FRONT BRAKE PANEL

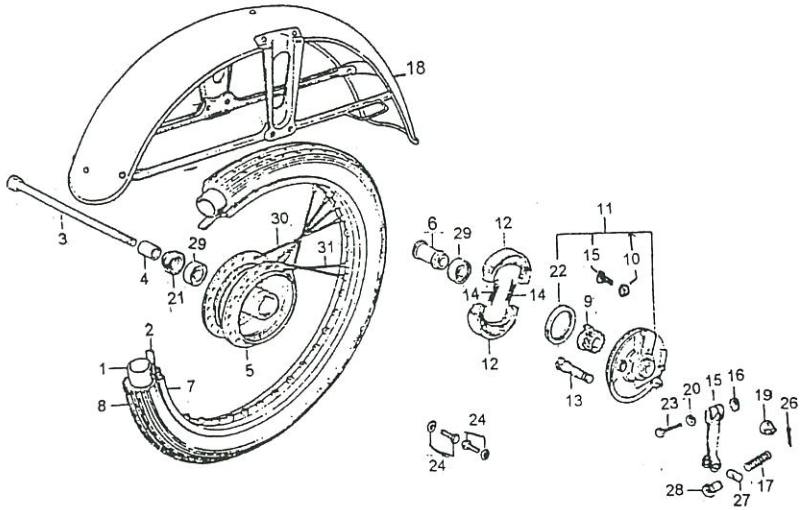

Service item	F.R.T.
TUBE, FR. WHEEL	0.9
•TIRE, FR. WHEEL	
AXLE, FR. WHEEL	0.2
HUB, FR. WHEEL	2.5
COLLAR, FR. AXLE DISTANCE	0.4
•PANEL COMP., FR. (INC. RELATIVE PART)	
•SHOE COMP., FR. BRAKE (ONE OR ALL)	
•BEARING, RADIAL BALL, 6301U (ADD 0.1 FOR EACH.)	
RIM. FR. WHEEL	2.2
GEAR COMP. SPEEDOMETER	0.3
•OIL SEAL: 21X37X7	
•OIL SEAL 47X58X7	
ARM FR. BRAKE (INC. RELATIVE PART)	0.1

Service item	F.R.T.
FENDER COMP., FR.	0.2

REF. NO.	PART NO.	DESCRIPTION	REQ'D. NO. OLD	REQ'D. NO. NEW
1	42712-268-003	TUBE, TIRE (2.75/18)	1	1
2	44713-180-004	FLAP, TIRE (18X3.0/1.85)	1	1
3	44301-107-000	AXLE FR. WHEEL	1	1
4	44311-229-000	COLLAR, FR. WHEEL SIDE	1	1
5	44601-397-000	HUB FR. WHEEL	1	1
6	44620-030-000	COLLAR, FR. AXLE DISTANCE	1	1
7	44701-028-004	RIM, FR. WHEEL	1	1
8	44711-330-003	TIRE, FR. WHEEL (2.75-18)	1	1
9	44804-028-000	GEAR COMP., SPEEDOMETER	1	1
10	44837-023-300	PACKING GREASE CAP SCREW	1	1
11	45010-350-000	PANEL COMP., FR. BRAKE	1	1
12	06430-KT0-305	SHOE COMP., BRAKE	2	2
13	45131-030-000	CAM, FR.BRAKE	1	1
14	43133-028-000	SPRING, BRAKE SHOE	2	2
15	45410-028-000	ARM FR. BRAKE	1	1
16	45436-001-000	FR. BRAKE ARM SETTING	1	1
17	45437-001-000	SPRING, FR. BRAKE ARM	1	1
18	61100-397-8901-XA	FENDER COMP., FR. (BARE)	1	1
	61100-397-8901-ZC	FENDER COMP., FR. BLUE	1	1
	61100-397-8901-ZA	FENDER COMP., FR. BLACK	1	1
	61100-397-8901-ZB	FENDER COMP., FR. SILVER	1	1
19	90305-169-000	NUT, FR. AXLE	1	1
20	90525-001-000	WASHER, RR, BRAKE ARM	1	1

REF. NO.	PART NO.	DESCRIPTION	REQ'D. NO. OLD	REQ'D. NO. NEW
21	90755-229-003	OIL SEAL, 21X37X7	1	1
22	91251-030-003	OIL SEAL, 47X58X7 (ARAI)	1	1
23	92101-06025-0A	BOLT, HEX., 6X25	1	1
24	93411-06012-00	BOLT FLANGE 6X16	4	4
25	93500-06005	SCREW, PAN 6X25	1	1
26	94201-30250	PIN SPLIT, 3.0X25	1	1
27	95015-31001	JOINT A, BRAKE ARM	1	1
28	95015-41000	NUT A, ADJUSTING	1	1
29	96140-63010-10	BEARING, RADIAL BALL, 6301U	2	2
30	97171-21185-F0	SPOKE A, 12X172.5	18	18
31	97353-21184-F0	SPOKE SET A, 12X172 (OUTSIDE)	18	18