F-39 REAR FENDER/LICENSE LIGHT

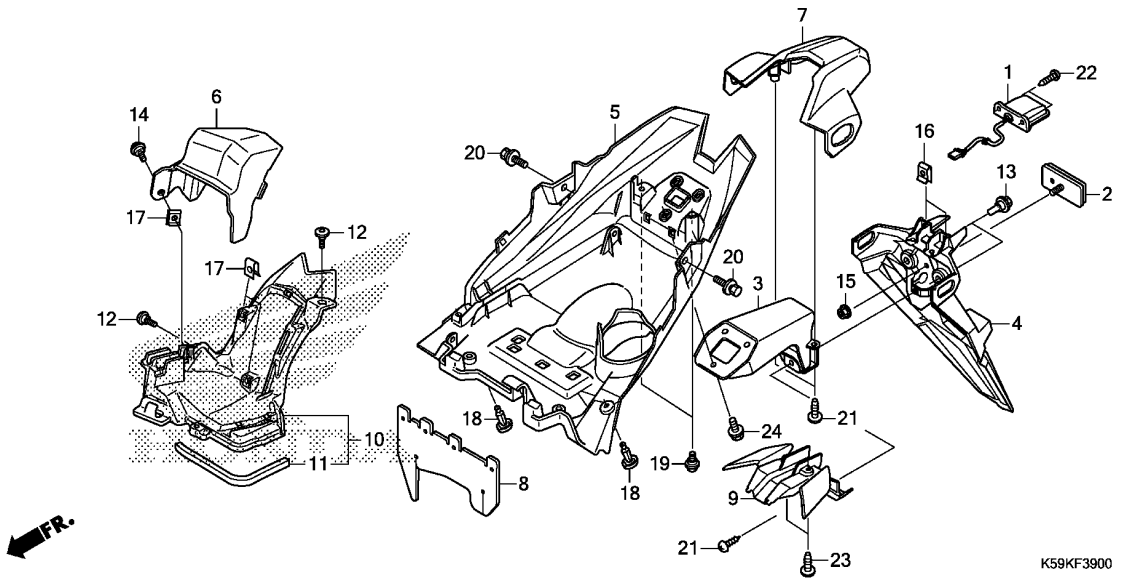

Ref. No.	L.O.N.	(Relative ref. Number) Description	F.R.T.
1	6161D8	LIGHT, LICENSE	0.6
3	4131M7	STAY, REAR FENDER	0.6
4	413105	FENDER A, REAR	0.6
5	413110	FENDER B, REAR	0.6
6	1151H8	COVER, RADIATOR RESERVE TANK	0.1
7	6161P5	COVER, LICENSE LIGHT	0.6
9	4131LD	COVER, REAR FENDER	0.6
10	4131N4	FENDER, INNER :REAR	0.3

Ref. No.	Part No.	Description	Reqd. QTY ACB150 CBT K	Serial No.	Parts catalogue code
1	33720-K59-A71	LIGHT ASSY., LICENSE	1		
2	33741-MS6-921	REFLECTOR, REFLEX(STANLEY)	1		
3	50186-K59-A70ZA	BRACKET, RR. FENDER *NHA40M* MAT CRYPTON SILVER METALLIC	1		
4	80100-K59-T10ZA	FENDER SET A, RR.(WL) *TYPE1*	1		
5	80101-K59-A70	FENDER B, RR.	1		
6	80102-K59-A10	COVER, RESERVE TANK	1		
7	80103-K59-A70ZB	COVER, RR. FENDER UPPER *TBLACK*.....BLACK	1		
8	80104-K59-A10	GUARD, SPLASH	1		
9	80104-K59-A70	COVER, RR. FENDER LOWER	1		
10	80106-K59-A10	FENDER ASSY., RR. INNER	1		
11	80108-KZR-600	SEAL, RR. INNER FENDER	1		
12	90001-KWR-000	BOLT, SOCKET, 6X18	2		
13	90116-KVB-900	BOLT, FLANGE, 6MM	2		
14	90117-KVG-A20	SCREW, PAN, 5X13	1		
15	90301-KWN-901	NUT, U, 5MM	1		
16	90302-KWW-A00	NUT, SPRING, 4MM	2		
17	90677-KAN-T00	NUT, CLIP, 5MM	3		
18	90683-GAZ-003	CLIP, TRIM	2		
19	91509-GE2-760	SCREW, PAN, 5X11.5	2		
20	93404-06012-00	BOLT-WASHER, 6X12	2		
21	93903-24380	SCREW, TAPPING, 4X12	3		