STEERING STEM

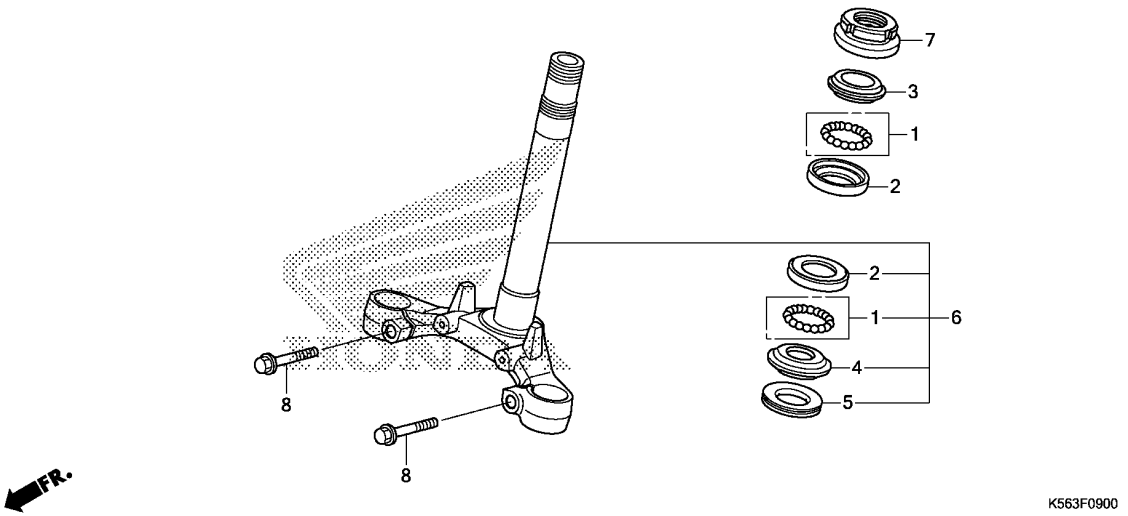

Ref. No.	L.O.N.	(Relative ref. Number) Description	F.R.T.
2		(1)	
	5101A0	RACE, STEERING BALL :UPPER ---	1.0
	5101A1	RACE, STEERING BALL :LOWER ---	1.2
	5101C9	RACE, STEERING BALL :BOTH ----	1.2
3	5101A9	RACE, STEERING TOP CONE ------	1.0
4		(1,5)	
	5101B0	RACE, STEERING BOTTOM CONE ---	1.2
6	510100	STEM OR SHAFT ASSY., STEERING	1.0
7	5101B2	THREAD, STEERING HEAD TOP ----	0.8

Ref. No.	Part No.	Description	Reqd. QTY FS 150R G	Serial No.	Parts catalogue code
1	06531-KW6-840	BALL ASSY., STEEL, #8X18 ----	2		
2	50301-KTR-900	RACE, STEERING TOP BALL -----	2		
3	53211-268-010	RACE, STEERING TOP CONE -----	1		
4	53212-200-000	RACE, STEERING BOTTOM CONE --	1		
5	53214-200-000	DUST SEAL, STEERING HEAD ----	1		
6	53219-K56-N00	STEM SUB ASSY., STEERING ----	1		
7	53220-KSP-860	THREAD COMP., STEERING HEAD TOP	1		
8	95701-08035-00	BOLT, FLANGE, 8X35 ----------	2		