Block No.

F-5

Steering stem

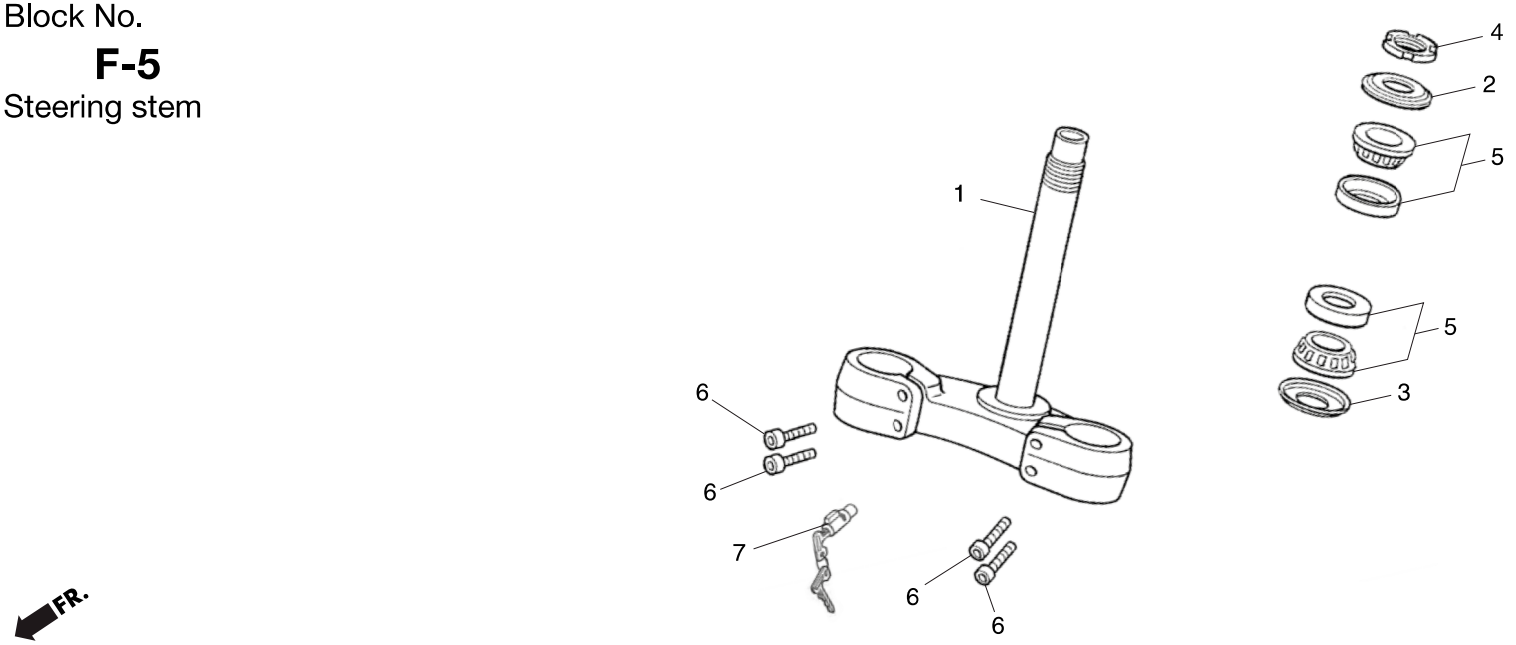

No.	Part Number	Description	Qty.	FRT	No.	Part Number	Description	Qty.	FRT
1	53200-NN4-K10	STEM COMP., STRG (BLACK)	1	1.4					
2	53214-KCY-670	DUST SEAL	1	1.2					
3	53214-KA4-701	DUST SEAL	1	—					
4	53229-NN4-G00	THREAD, STRG	1	1.2					
5	91015-425-831	BEARING, HEAD PIPE UP	2	1.6					
6	96600-08025-10	SOCKET BOLT, 8X25	4	—					
7	53600-NN4-J10	LOCK COMP. HANDLE	1	—					