F 6

# E-23-2

**Carburetor**
**(Component parts 2)**

**Carburateur**
**(Pièces composants 2)**

**Vergaser**
**(Einzelteile 2)**

**Carburador**
**(Piezas componentes 2)**

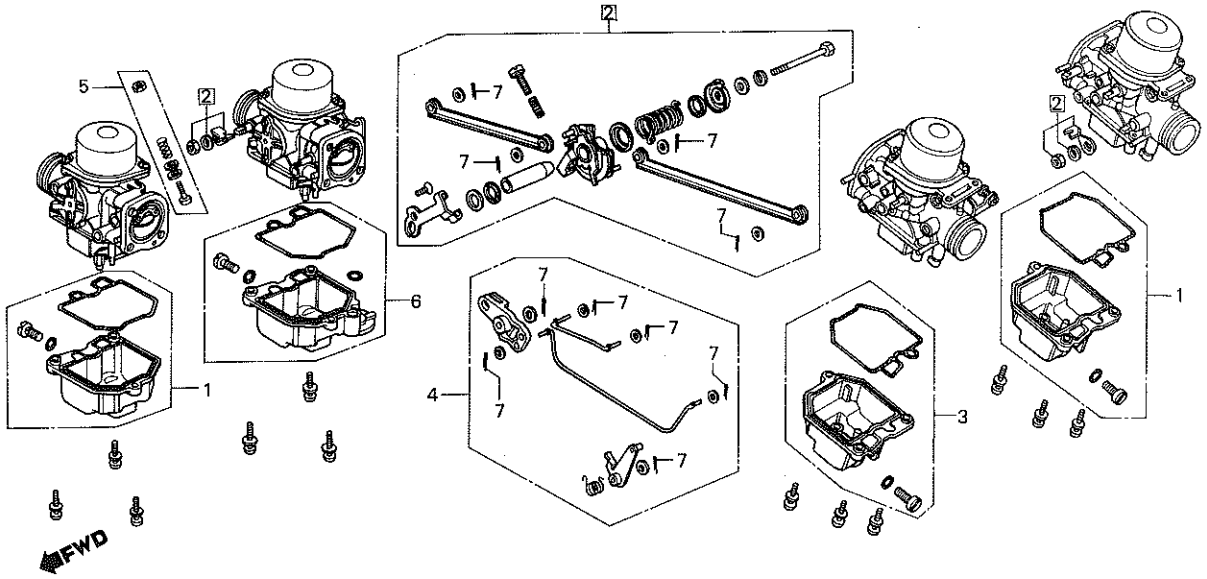


B463-25

| Service item | F.R.T. |
|---|---|
| CHAMBER SET FLOAT | 1.3 |
| (ADD 0.1 FOR EACH.) | |
| (WHEN SERVICING COMP., UNIT, F.R.T. IS 1.5.) | |
| LINK SET | 1.9 |
| ROD SET, CHOKE | 1.5 |

| Ref. No. | Part No. | Description | Reqd. No. GL1100 D | ID | DD | D2D | AD | Serial No. | Area code |
|---|---|---|---|---|---|---|---|---|---|
| 1 | 16015-463-004 | CHAMBER SET A, FLOAT | 2 | 2 | 2 | 2 | 2 | | |
| [2] | 16017-463-004 | LINK SET | 1 | 1 | 1 | 1 | 1 | | |
| 3 | 16023-463-004 | CHAMBER SET B, FLOAT | 1 | 1 | 1 | 1 | 1 | | |
| 4 | 16025-463-004 | ROD SET, CHOKE | 1 | 1 | 1 | 1 | 1 | | |
| 5 | 16029-413-004 | SCREW SET C | 2 | 2 | 2 | 2 | 2 | | |
| 6 | 16045-463-004 | CHAMBER SET C, FLOAT | 1 | 1 | 1 | 1 | 1 | | |
| 7 | 94201-10080 | PIN, SPLIT, 1.0X8 | 10 | 10 | 10 | 10 | 10 | | |